HEAT TREATMENT & FINAL FINISH

| PHYSICAL PROPERTIES | |
|---|---|
| Y.P. | |
| T.S. | |
| EL.2 | |
| RED. | |
| BR. | |
| ROCK. | |

AUGUST 28, 1941

REVISIONS

| | | | |
|---|---|---|---|
| 4 | 4-20-42 | | |
| 5 | 5-6-42 | | |
| 6 | 11-23-43 | | |
| 7 | 11-20-46 | | |
| 8 | CONVERSION 10-30-51 | | |

B6147628

DRG. PERTAINS TO

| | |
|---|---|
| D35500 | MAGAZINE, BOX, 20 CARTRIDGE |

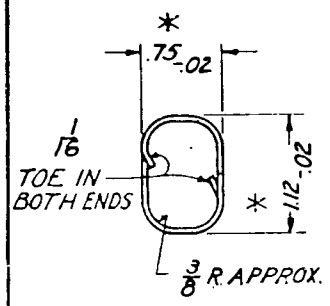


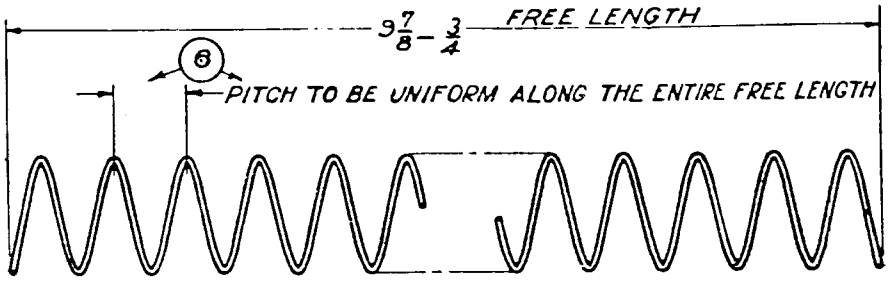


MAXIMUM SOLID HEIGHT ---------- .8

MEAN ASSEMBLED HEIGHT ---------- 5 27/32

*LOAD AT MEAN ASSEMBLED HEIGHT -------- 4 LBS. ± 1/2 LB. (5)

*DIAMETER OF WIRE ---------- .054

TOTAL NUMBER OF COILS ---------- 14±1

*LOAD AT MINIMUM OPERATING HEIGHT -------- 10 LBS. ± 1 LB. (5)

AFTER BEING COMPRESSED SOLID

TYPE OF ENDS ---------- SPECIAL AS SHOWN

WOUND ---------- RH OR LH

MINIMUM OPERATING HEIGHT ---------- 1 5/32

SPRING, MAGAZINE ~~B147628~~ 6147628

* SPRING STEEL WIRE - WD 1085 SPECIAL OR WD 1095 SPECIAL (7) (6)

*MANDATORY

| D'FTSMAN | TRACER | L'DG. D'FTSMAN |
|---|---|---|
| V.W.G. | H.M.F. | C.J.F. |
| CHECKER | S.A. | CHIEF D'FTSMAN |
| C.M. | E.G.W. | S.A. / O.O. |

SUBMITTED:

LT. COL. ORD. DEPT. U. S. A.

APPROVED BY ORDER OF THE CHIEF OF ORDNANCE:-

MAJ. ORD. DEPT. U. S. A.

ORDNANCE DEPT. U. S. A.

TOLERANCE ± ALLOWED ON ALL DIMENSIONS UNLESS OTHERWISE SPECIFIED.

SCALE 1/1

B6147628

~~B147628~~

SUPERSEDES OLD TRACING B147628 UNDER REVISION DATE OF APRIL 20, 1942

SUPERSEDES B147628